www.spg.co.kr

SPG MOTOR

PELLET HEATING SYSTEM MOTOR

What is their choice? It is SPG

All of the four major electric home appliance manufacturers ; GE, Whirlpool, Electrolux, have chosen SPG Motor.
SPG which produces the world best quality motors shall become the standard of the world motor.

Product descriptions

PLANETARY GEARHEADS

- Small-sized, Light, Compact
- High Precision, High Durability
- High Efficiency
- Easy Mounting with various Servo Motors

INDUSTRIAL MOTOR

- Compact Size, High Efficiency.
- High Reliability & Low Noise by Precise processing.

BLDC GEARED MOTOR

- Motors for factory automation and Miscellaneous automation installations
- High power, Excellent speed stability, Regular torque, low noise

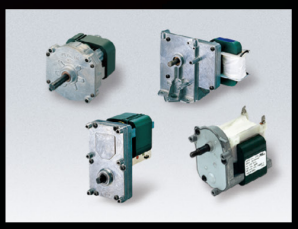

SHADED POLE GEARED MOTOR

- Motors for home appliances, OA instruments, Ad equipment
- Produced mainly for export

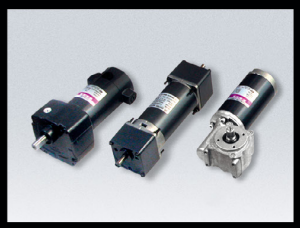

STANDARD GEARED MOTOR

- Industrial appliances, home appliances, OA instruments, and medical equipments
- Offering a wide range of product lines in accordance with rotation direction, speed control, and stop function Motors

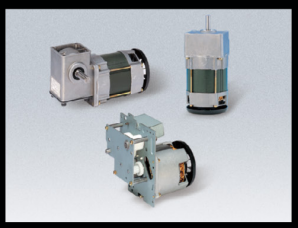

CAPACITOR RUN GEARED MOTOR

- Motors for copiers, automatic doors, and juicers
- High power and custom made orders

DC GEARED MOTOR

- Motors for vending machines, Coin exchanger, Printers, X-Ray and etc
- Product advantages include maneuverability, high power, and easy speed control.

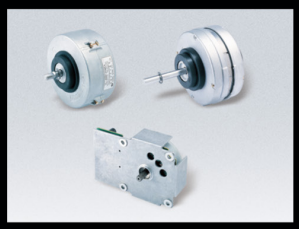

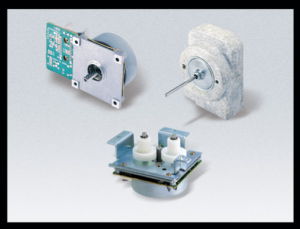

BLDC MOTOR

- Motors for copiers, printers, home appliances (air conditioners and refrigerators), FA instruments and air cleaners

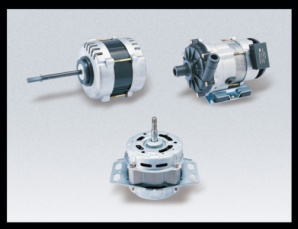

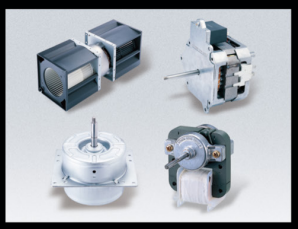

AC MOTOR

- Motors for air conditioners, microwave ovens, refrigerators, washers, dishwashers, freezers, and pumps

Pellet Heating System Motor

ICG-75 OPEN CASE TYPE
(page 09p)

ISG-3 TYPE(25~50T)
(page 15p~16p)

ISG-3 TYPE
(HOLLOW SHAFT)
(page 17p)

DC BRUSHLESS SERIES
(page 18p)

STANDARD AC TYPE
(80 FRAME)
(page 08p)

ICG-75 OPEN CASE TYPE
(page 09p)

ISG-3 TYPE(25~50T)
(page 15p~16p)

ISG-3 TYPE
(HOLLOW SHAFT)
(page 17p)

The world-class SPG motor completes the Pellet Heating System, allowing it to go one step further in delivering high performance to its finished products.

The world-class technology of the advanced SPG Company has been thoroughly researched and made into environmentally-friendly motor products.
The application of SPG Motors makes it possible to accomplish the environmentally-friendly Pellet Heating Systems.

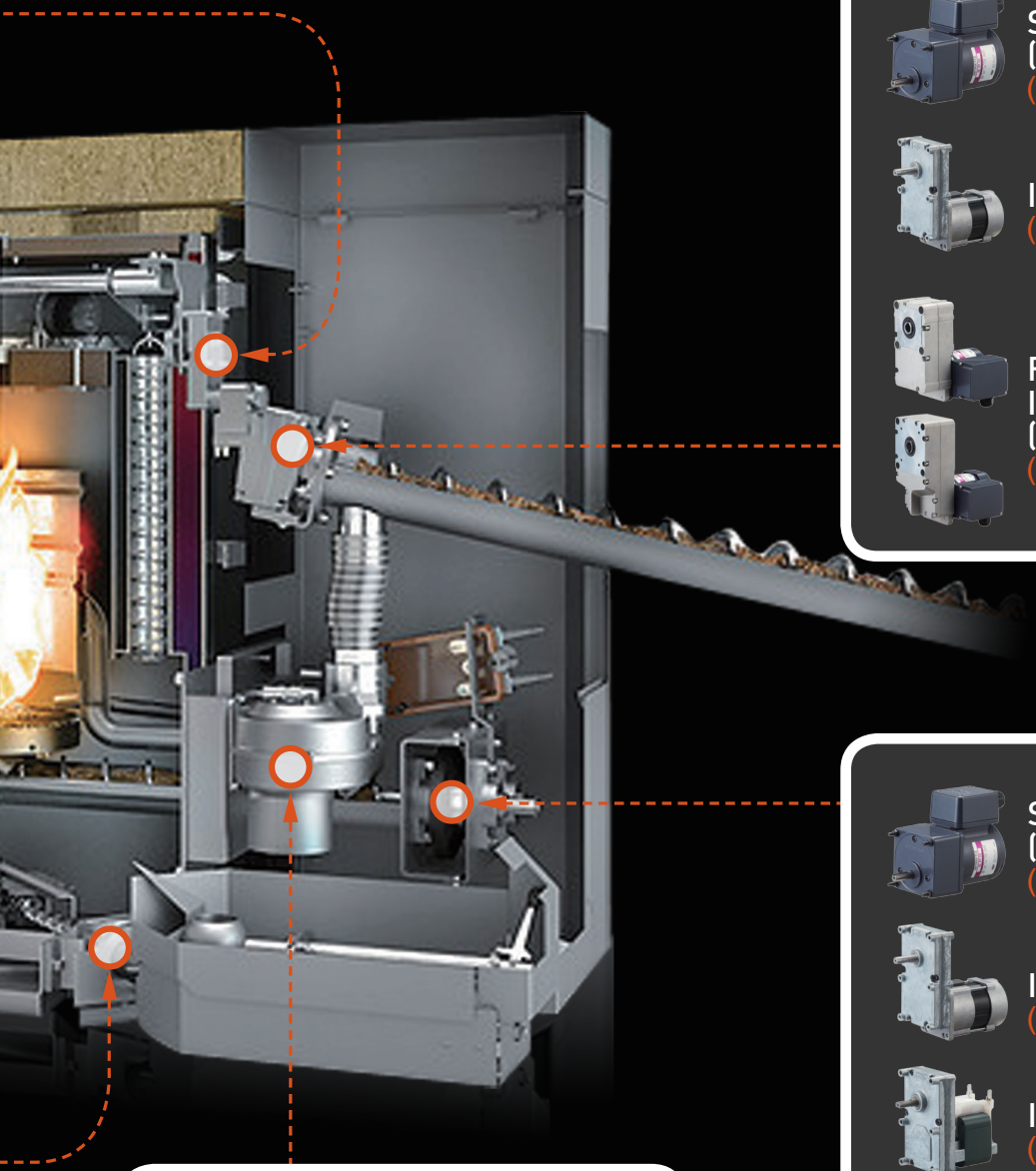

STANDARD AC TYPE
(80 FRAME)
(page 08p)

ICG-75 OPEN CASE TYPE
(page 09p)

FLAT GEARED
INDUCTION MOTOR
(FA/FB SERIES)
(page 10p~14p)

STANDARD AC TYPE
(80 FRAME)
(page 08p)

ICG-75 OPEN CASE TYPE
(page 09p)

ISG-3 TYPE(25~50T)
(page 15p~16p)

ISG-3 TYPE
(HOLLOW SHAFT)
(page 17p)

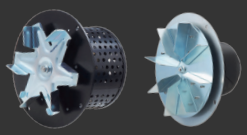

AC RADIAL
FAN MOTOR
(page 19p~25p)

C O N T E N T S

AC GEARED MOTOR

STANDARD AC TYPE(80 FRAME) 08
ICG-75 OPEN CASE TYPE 09
FLAT GEARED INDUCTION MOTOR(FA SERIES) 10
FLAT GEARED INDUCTION MOTOR(FB SERIES) 12

SHADED POLE GEARED MOTOR

ISG-3 TYPE(25~30T) 15
ISG-3 TYPE(40~50T) 16
ISG-3 TYPE(HOLLOW SHAFT) 17

Global Industry Standard for Motor

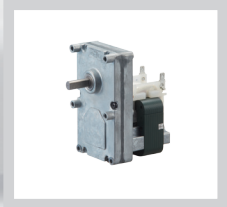

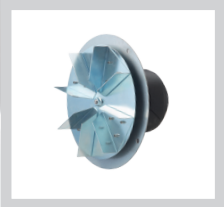

BLDC GEARED MOTOR

DC BRUSHLESS SERIES 18

AC RADIAL FAN MOTOR

Single inlet, Ø 150_A1520 19
Single inlet, Ø 160_A1640 20
Single inlet, Ø 180_A1826 21
Single inlet, Ø 180_A1845 22
Single inlet, Ø 210_A2145 23
Single inlet, Ø 160_A1626 24

AC GEARED MOTOR

STANDARD AC TYPE(80 FRAME)

- **APPLICATION** : PELLET BURNER (OR STOVE)
- **INPUT VOLTAGE** : 1PHASE 230V~ 50Hz
- **INSULATION CLASS** : B (130)
- **DUTY** : CONTINUOUS, 15min
- **SPEED RANGE** : 5.8 ~ 16.0 r/min
- **OUTPUT ROTATION** : C.W AND C.C.W
- **GEAR HEAD PERMISSIBLE TORQUE** : 8.0 N·m Max.
- **MOTOR PROTECTOR** : THERMALLY PROTECTED
- **IP GRADE** : IP54
- **MOUNTING POSITION** : ANY
- **CABLE EXIT** : POWER CORD

SPECIFICATION

TYPE	GEAR HEAD RATIO	IDLE SPEED [r/min]	STARTING TORQUE [N.m]	RATING TORQUE [N.m]	INPUT CURRENTS [A]	INPUT WATTS [W]	OUTPUT WATTS [W]	DUTY
S8I15GX-TCE	90 - 250	5.8 - 16	0.1	0.15	0.17	40	20	CONT.
	90 - 250	5.8 - 16	0.2	0.18	0.26	59	22	15min
S8I25GX-TCE	90 - 250	5.8 - 16	0.12	0.22	0.24	55	28	CONT.
	90 - 250	5.8 - 16	0.2	0.28	0.29	67	35	15min
S8R25GX-TCE	90 - 250	5.8 - 16	0.21	0.23	0.27	63	29	30min

DEMENSIONS

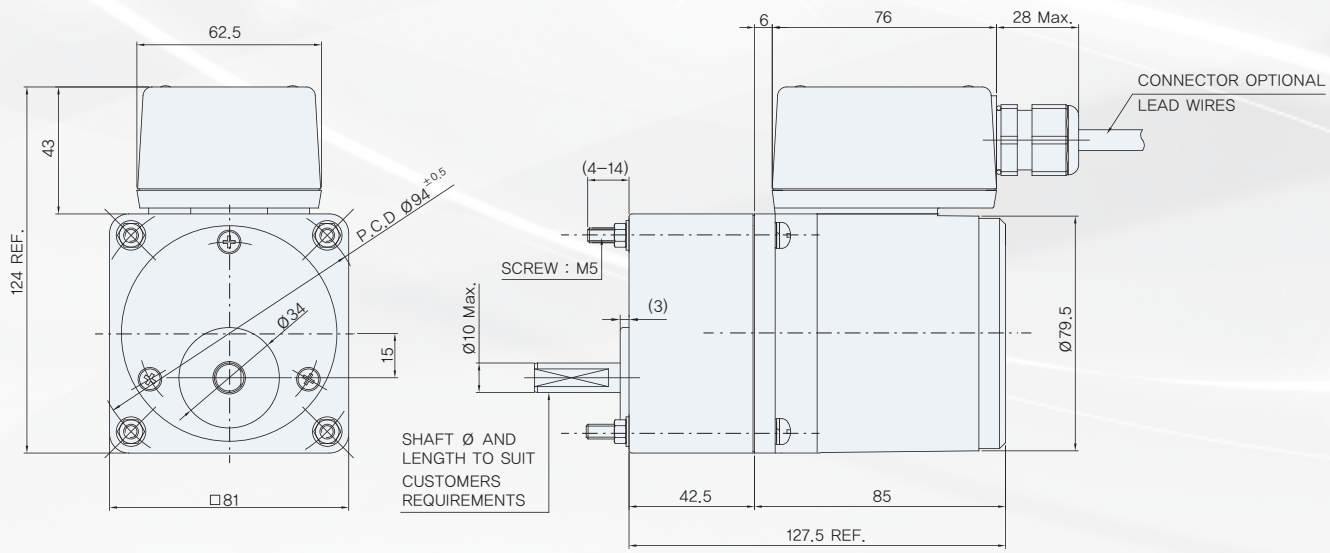

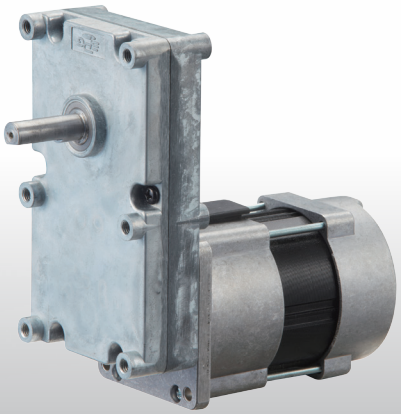

ICG-75 OPEN CASE TYPE

- **APPLICATION** : PELLET BURNER (OR STOVE)
- **INPUT VOLTAGE** : 1PHASE 230V~ 50Hz
- **INSULATION CLASS** : B (130)
- **DUTY** : 30min
- **SPEED RANGE** : 1.6, 3.0, 7.0, 10.0 r/min AND DEMANDED SPEED
- **OUTPUT ROTATION** : C.W AND C.C.W
- **GEAR HEAD PERMISSIBLE TORQUE** : 30 N·m Max.
- **MOTOR PROTECTOR** : THERMALLY PROTECTED
- **IP GRADE** : IP20
- **MOUNTING POSITION** : ANY
- **CABLE EXIT** : DEMANDED CONNECTOR

SPECIFICATION

TYPE	GEAR HEAD RATIO	IDLE SPEED [r/min]	STARTING TORQUE [N.m]	RATING TORQUE [N.m]	INPUT CURRENTS [A]	INPUT WATTS [W]	OUTPUT WATTS [W]	DUTY
ICG-75228	1850	1.6	0.024	0.026	0.09	19.5	6.5	30min
	922	3.0	0.027	0.035	0.11	25.5	8.8	30min
ICG-75235	406	7.0	0.046	0.053	0.14	33.0	13.4	30min
	283	10.0	0.063	0.066	0.17	38.0	16.7	30min

DEMENSIONS

TYPE	A	B
ICG-75228 TYPE	90.5	123.914
ICG-75235 TYPE	97.5	130.914

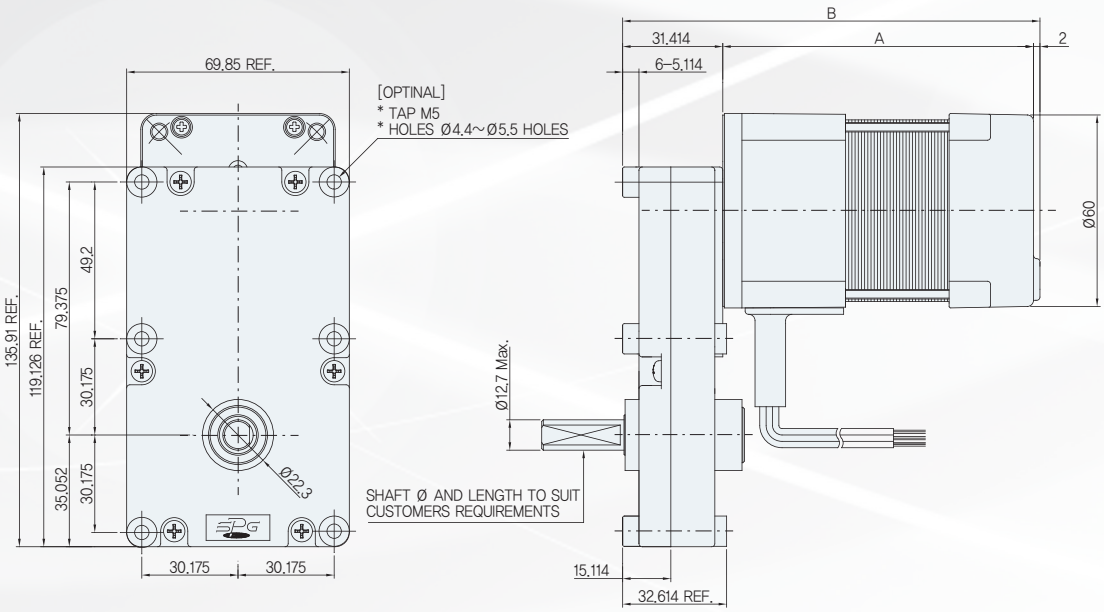

FLAT GEARED INDUCTION MOTOR (FA SERIES)

- **APPLICATION** : PELLET BURNER (OR STOVE)
- **INPUT VOLTAGE** : 1PHASE 230V~ 50Hz
- **INSULATION CLASS** : B (130)
- **DUTY** : CONTINUOUS
- **GEAR HEAD RATIO** : 1/43 TO 1/905
- **SPEED RANGE** : 5.0 - 34.3 r/min AND DEMANDED SPEED
- **OUTPUT ROTATION** : C.W AND C.C.W
- **GEAR HEAD PERMISSIBLE TORQUE** : 50 N·m Max.
- **MOTOR PROTECTOR** : THERMALLY PROTECTED
- **IP GRADE** : IP54
- **MOUNTING POSITION** : ANY
- **CABLE EXIT** : DEMANDED CONNECTOR

MOTOR

NO	OUTPUT	Votage	Frequency	Duty	Rated			Starting Torque	Stall Torque	Capacitor
					Current	speed	Torque			
	W	V	Hz		A	r/min	Nm	Nm	Nm	μF
1	25	230	50	Cont.	0.27	1300	0.26	0.15	0.32	1.5
2	40	230	50		0.32	1300	0.31	0.19	0.41	2.0
3	60	230	50		0.48	1300	0.49	0.34	0.66	3.5
4	90	230	50		0.70	1300	0.74	0.53	0.98	5.0

GEARED MOTOR

NO	Motor Design	Ratio	Stage	No Load		Rated			Permissible Torque	Starting Torque	Stall Torque
				Speed	Current	speed	Current	Torque			
		i		r/min	A	r/min	A	Nm	Nm	Nm	Nm
1	25W	43	3	34.3	0.12	30.2	0.27	8.2	50.0	4.7	10.1
2		61	3	24.1	0.12	21.2	0.27	11.6		6.7	14.3
3		86	3	17.1	0.12	15.0	0.27	16.4		9.4	20.2
4		107	3	13.8	0.12	12.2	0.27	20.3		11.7	24.9
5		132	3	11.2	0.12	9.8	0.27	25.0		14.4	30.8
6		179	3	8.2	0.12	7.2	0.27	34.0		19.6	41.9
7		217	4	6.8	0.12	6.0	0.27	37.0		21.4	45.6
8		295	4	5.0	0.12	4.4	0.27	50.3		29.0	61.9
9		324	4	4.6	0.12	4.0	0.27	55.3		31.9	68.1
10		368	4	4.0	0.12	3.5	0.27	62.8		36.2	77.2
11		432	4	3.4	0.12	3.0	0.27	73.8		42.6	90.8
12		520	4	2.8	0.12	2.5	0.27	88.7		51.2	109.1
13		651	4	2.3	0.12	2.0	0.27	111.1		64.1	136.7
14		905	4	1.6	0.12	1.4	0.27	154.4		89.1	190.1
1	40W	43	3	34.3	0.15	30.2	0.32	9.7	50.0	6.0	12.9
2		61	3	24.1	0.15	21.2	0.32	13.9		8.5	18.4
3		86	3	17.1	0.15	15.0	0.32	19.5		12.0	25.8
4		107	3	13.8	0.15	12.2	0.32	24.2		14.8	32.0
5		132	3	11.2	0.15	9.8	0.32	29.9		18.3	39.5
6		179	3	8.2	0.15	7.2	0.32	40.5		24.8	53.6
7		217	4	6.8	0.15	6.0	0.32	44.1		27.1	58.4
8		295	4	5.0	0.15	4.4	0.32	60.0		36.7	79.3
9		324	4	4.6	0.15	4.0	0.32	66.0		40.4	87.2
10		368	4	4.0	0.15	3.5	0.32	74.8		45.9	99.0
11		432	4	3.4	0.15	3.0	0.32	87.9		53.9	116.3

1	60W	43	3	34.3	0.23	30.2	0.48	15.4	50.0	10.7	20.7
2		61	3	24.1	0.23	21.2	0.48	21.9		15.2	29.5
3		86	3	17.1	0.23	15.0	0.48	30.9		21.4	41.6
4		107	3	13.8	0.23	12.2	0.48	38.2		26.5	51.4
5		132	3	11.2	0.23	9.8	0.48	47.2		32.7	63.6
6		179	3	8.2	0.23	7.2	0.48	64.1		44.5	86.3
7		217	4	6.8	0.23	6.0	0.48	69.8		48.4	94.0
8		295	4	5.0	0.23	4.4	0.48	94.8		65.8	127.7
1	90W	43	3	34.3	0.30	30.2	0.70	23.3	50.0	16.7	30.8
2		61	3	24.1	0.30	21.2	0.70	33.1		23.7	43.9
3		86	3	17.1	0.30	15.0	0.70	46.6		33.4	61.7
4		107	3	13.8	0.30	12.2	0.70	57.7		41.3	76.4
5		132	3	11.2	0.30	9.8	0.70	71.3		51.0	94.4
6		179	3	8.2	0.30	7.2	0.70	96.8		69.3	128.2

FAH17(20)-□-IT25(40)XL(B,R)

Output (W)	ØHW	t	u	Ød	L
25/40	17 (20)	19.3 (22.8)	5 (6)	25 (30)	170.5

NOTE
- ( ) are the dimensions at ØHW 20.
- Cable gland position change is possible

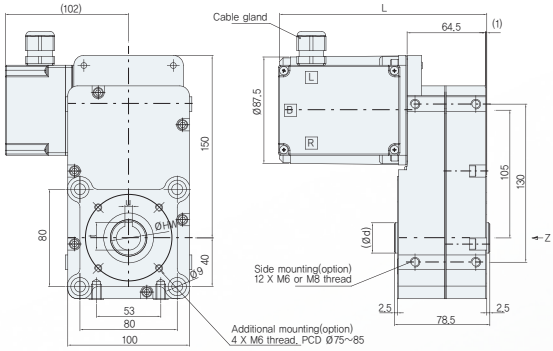

FAH17(20)-□-IT60(90)XL(B,R)

Output (W)	ØHW	t	u	Ød	L
60	17 (20)	19.3 (22.8)	5 (6)	25 (30)	188.3
90					203.3

NOTE
- ( ) are the dimensions at ØHW 20.
- Cable gland position change is possible

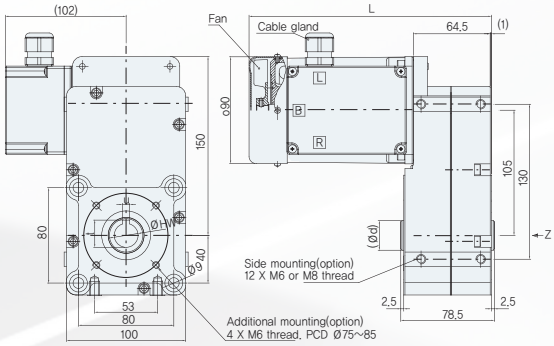

FAR(L,B)22-□-IT□XL(B,R)

Output (W)	L
25/40	170.5
60	188.3
90	203.3

NOTE
- Cable gland position change is possible

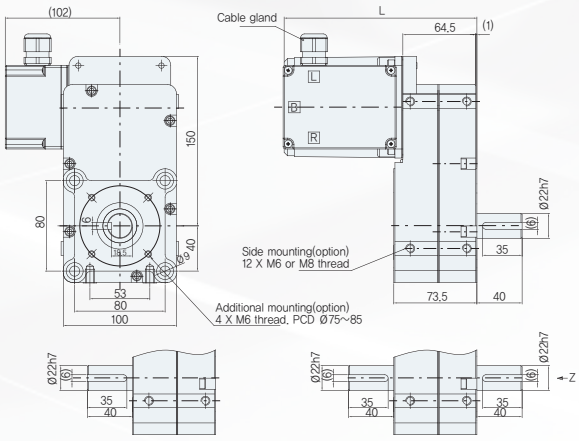

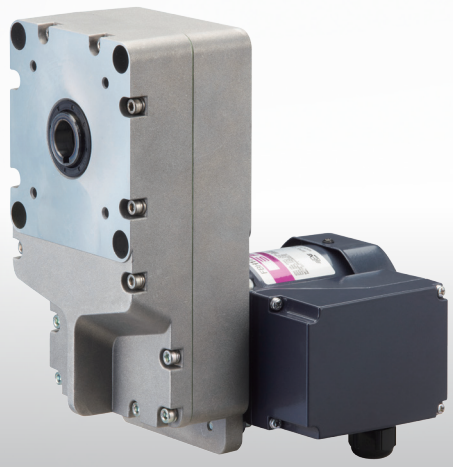

FLAT GEARED INDUCTION MOTOR (FB SERIES)

- **APPLICATION** : PELLET BURNER (OR STOVE)
- **INPUT VOLTAGE** : 1PHASE 230V~ 50Hz
- **INSULATION CLASS** : B (130)
- **DUTY** : CONTINUOUS
- **GEAR HEAD RATIO** : 1/21 TO 1/306
- **SPEED RANGE** : 4.8 - 70.5 r/min AND DEMANDED SPEED
- **OUTPUT ROTATION** : C.W AND C.C.W
- **GEAR HEAD PERMISSIBLE TORQUE** : 100 N·m Max.
- **MOTOR PROTECTOR** : THERMALLY PROTECTED
- **IP GRADE** : IP54
- **MOUNTING POSITION** : ANY
- **CABLE EXIT** : DEMANDED CONNECTOR

MOTOR

NO	OUTPUT	Votage	Frequency	Duty	Rated			Starting Torque	Stall Torque	Capacitor
					Current	speed	Torque			
	W	V	Hz		A	r/min	Nm	Nm	Nm	μF
1	25	230	50	Cont.	0.27	1300	0.26	0.15	0.32	1.5
2	40	230	50		0.32	1300	0.31	0.19	0.41	2.0
3	60	230	50		0.48	1300	0.49	0.34	0.66	3.5
4	90	230	50		0.70	1300	0.74	0.53	0.98	5.0
5	180	230	50		1.29	1300	1.29	0.90	2.00	8.0

GEARED MOTOR

NO	Motor Design	Ratio	Stage	No Load		Rated			Permissible Torque	Starting Torque	Stall Torque
				Speed	Current	speed	Current	Torque			
		i		r/min	A	r/min	A	Nm	Nm	Nm	Nm
1	25W	21	3	70.5	0.12	61.9	0.27	4.0	100.0	2.3	4.9
2		39	3	37.9	0.12	33.3	0.27	7.4		4.3	9.1
3		49	3	30.2	0.12	26.5	0.27	9.3		5.4	11.4
4		58	3	25.5	0.12	22.4	0.27	11.0		6.3	13.5
5		62	3	23.9	0.12	21.0	0.27	11.8		6.8	14.5
6		74	3	20.0	0.12	17.6	0.27	14.0		8.1	17.3
7		78	3	19.0	0.12	16.7	0.27	14.8		8.5	18.2
8		82	3	18.0	0.12	15.9	0.27	15.5		9.0	19.1
9		93	3	15.9	0.12	14.0	0.27	17.6		10.2	21.7
10		105	3	14.1	0.12	12.4	0.27	19.9		11.5	24.5
11		118	3	12.5	0.12	11.0	0.27	22.4		12.9	27.5
12		131	3	11.3	0.12	9.9	0.27	24.8		14.3	30.6
13		143	3	10.3	0.12	9.1	0.27	27.1		15.6	33.4
14		167	3	8.9	0.12	7.8	0.27	31.7		18.3	39.0
15		216	3	6.9	0.12	6.0	0.27	40.9		23.6	50.4
16		240	3	6.2	0.12	5.4	0.27	45.5		26.2	56.0
17		306	3	4.8	0.12	4.2	0.27	58.0		33.5	71.4
18	40W	21	3	70.5	0.15	61.9	0.32	4.7	100	2.9	6.3
19		39	3	37.9	0.15	33.3	0.32	8.8		5.4	11.7
20		49	3	30.2	0.15	26.5	0.32	11.1		6.8	14.6
21		58	3	25.5	0.15	22.4	0.32	13.1		8.0	17.3
22		62	3	23.9	0.15	21.0	0.32	14.0		8.6	18.5
23		74	3	20.0	0.15	17.6	0.32	16.7		10.2	22.1
24		78	3	19.0	0.15	16.7	0.32	17.6		10.8	23.3

25		82	3	18.0	0.15	15.9	0.32	18.5		11.4	24.5
26		93	3	15.9	0.15	14.0	0.32	21.0		12.9	27.8
27		105	3	14.1	0.15	12.4	0.32	23.7		14.5	31.4
28		118	3	12.5	0.15	11.0	0.32	26.7		16.3	35.3
29	40W	131	3	11.3	0.15	9.9	0.32	29.6	100	18.1	39.2
30		143	3	10.3	0.15	9.1	0.32	32.3		19.8	42.7
31		167	3	8.9	0.15	7.8	0.32	37.7		23.1	49.9
32		216	3	6.9	0.15	6.0	0.32	48.8		29.9	64.6
33		240	3	6.2	0.15	5.4	0.32	54.2		33.2	71.7
34		306	3	4.8	0.15	4.2	0.32	69.2		42.4	91.5
35		21	3	70.5	0.23	61.9	0.48	7.5		5.2	10.1
36		39	3	37.9	0.23	33.3	0.48	13.9		9.7	18.8
37		49	3	30.2	0.23	26.5	0.48	17.5		12.1	23.6
38		58	3	25.5	0.23	22.4	0.48	20.7		14.4	27.9
39		62	3	23.9	0.23	21.0	0.48	22.1		15.4	29.8
40		74	3	20.0	0.23	17.6	0.48	26.4		18.3	35.6
41		78	3	19.0	0.23	16.7	0.48	27.9		19.3	37.5
42		82	3	18.0	0.23	15.9	0.48	29.3		20.3	39.5
43	60W	93	3	15.9	0.23	14.0	0.48	33.2	100	23.1	44.7
44		105	3	14.1	0.23	12.4	0.48	37.5		26.0	50.5
45		118	3	12.5	0.23	11.0	0.48	42.2		29.2	56.8
46		131	3	11.3	0.23	9.9	0.48	46.8		32.5	63.0
47		143	3	10.3	0.23	9.1	0.48	51.1		35.4	68.8
48		167	3	8.9	0.23	7.8	0.48	59.7		41.4	80.4
49		216	3	6.9	0.23	6.0	0.48	77.2		53.5	103.9
50		240	3	6.2	0.23	5.4	0.48	85.7		59.5	115.5
51		306	3	4.8	0.23	4.2	0.48	109.3		75.8	147.2
52		21	3	70.5	0.30	61.9	0.70	11.3		8.1	15.0
53		39	3	37.9	0.30	33.3	0.70	21.0		15.1	27.9
54		49	3	30.2	0.30	26.5	0.70	26.4		18.9	35.0
55		58	3	25.5	0.30	22.4	0.70	31.3		22.4	41.4
56		62	3	23.9	0.30	21.0	0.70	33.4		24.0	44.3
57		74	3	20.0	0.30	17.6	0.70	39.9		28.6	52.9
58		78	3	19.0	0.30	16.7	0.70	42.1		30.1	55.7
59		82	3	18.0	0.30	15.9	0.70	44.2		31.7	58.6
60	90W	93	3	15.9	0.30	14.0	0.70	50.2	100	35.9	66.4
61		105	3	14.1	0.30	12.4	0.70	56.6		40.6	75.0
62		118	3	12.5	0.30	11.0	0.70	63.7		45.6	84.3
63		131	3	11.3	0.30	9.9	0.70	70.7		50.6	93.6
64		143	3	10.3	0.30	9.1	0.70	77.1		55.3	102.2
65		167	3	8.9	0.30	7.8	0.70	90.1		64.5	119.3
66		216	3	6.9	0.30	6.0	0.70	116.5		83.5	154.3
67		240	3	6.2	0.30	5.4	0.70	129.5		92.7	171.5
68		306	3	4.8	0.30	4.2	0.70	165.1		118.2	218.6
69		21	3	70.5	0.75	61.9	1.29	19.7		13.8	30.6
70		39	3	37.9	0.75	33.3	1.29	36.7		25.6	56.9
71		49	3	30.2	0.75	26.5	1.29	46.1		32.1	71.4
72		58	3	25.5	0.75	22.4	1.29	54.5		38.1	84.6
73		62	3	23.9	0.75	21.0	1.29	58.3		40.7	90.4
74		74	3	20.0	0.75	17.6	1.29	69.6		48.6	107.9
75		78	3	19.0	0.75	16.7	1.29	73.4		51.2	113.7
76		82	3	18.0	0.75	15.9	1.29	77.1		53.8	119.6
77	180W	93	3	15.9	0.75	14.0	1.29	87.5	100	61.0	135.6
78		105	3	14.1	0.75	12.4	1.29	98.7		68.9	153.1
79		118	3	12.5	0.75	11.0	1.29	111.0		77.4	172.0
80		131	3	11.3	0.75	9.9	1.29	123.2		85.9	191.0
81		143	3	10.3	0.75	9.1	1.29	134.5		93.8	208.5
82		167	3	8.9	0.75	7.8	1.29	157.0		109.6	243.5
83		216	3	6.9	0.75	6.0	1.29	203.1		141.7	314.9
84		240	3	6.2	0.75	5.4	1.29	225.7		157.5	349.9
85		306	3	4.8	0.75	4.2	1.29	287.8			446.1

FBH17(20)-□ -IT25(40)XL(B,R)

Output (W)	ØHW	t	u	Ød	L
25/40	17 (20)	19.3 (22.8)	5 (6)	25 (30)	186.5

NOTE
- ( ) are the dimensions at ØHW 20.
- Cable gland position change is possible

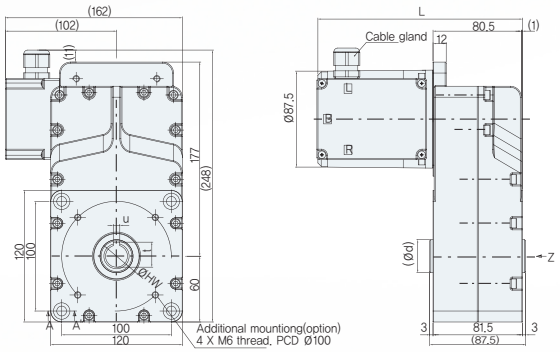

FBH17(20)-□ -IT60(90)XL(B,R)

Output (W)	ØHW	t	u	Ød	L
60	17 (20)	19.3 (22.8)	5 (6)	25 (30)	204.3
90					219.3

NOTE
- ( ) are the dimensions at ØHW 20.
- Cable gland position change is possible

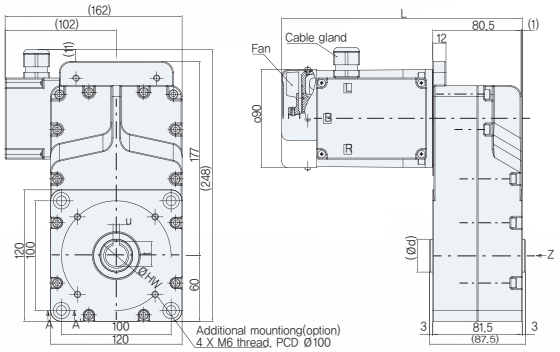

FBH17(20)-□ -IT180BL(B,R)

Output (W)	ØHW	t	u	Ød	L
120/150 180	17 (20)	19.3 (22.8)	5 (6)	25 (30)	241.5

NOTE
- ( ) are the dimensions at ØHW 20.
- Cable gland position change is possible

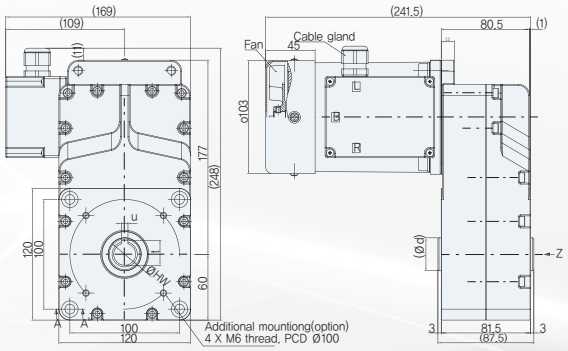

FBR(L,B)28-□-IT□X(B)L(B,R)

Output (W)	L
25/40	186.5
60	204.3
90	219.3
120/150/180	241.5

NOTE
- Cable gland position change is possible

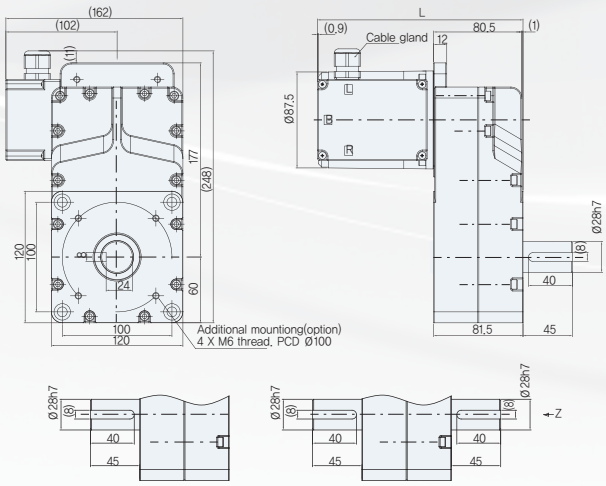

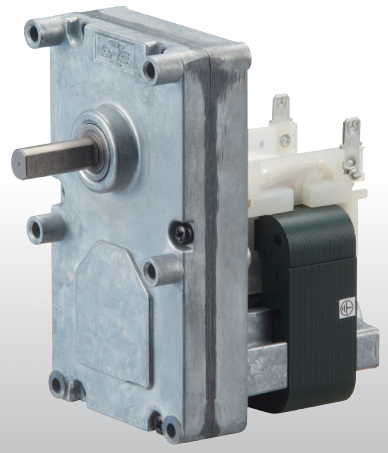

ISG-3 TYPE(25~30T)

- **Application** : Pellet Burner(or Stove) - Fuel supply
- **Insulation Class** : B(130)
- **Mounting Position** : Any
- **Output Rotation** : C.W or C.C.W
- **Motor Protection** : Impedance or Thermally Protected
- **Cable exit** : Variable
- **Gear Box Permissible Torque** : 33.8 Nm
- **Duty** : S1(Continuous), S2(Short-time), S3(Intermittent periodic)
- **Output Shaft** : Length and diameter to suit individual customer requirements
- **etc.** : Low Noise, Fan Ass'y Type

SPECIFICATION

Type	A	B
ISG-3225Type	25mm	92mm
ISG-3230Type	30mm	97mm

Ratio	1/1414(Gear Step : 5)	1/1821(Gear Step : 5)
50Hz	2.0 r/min	1.5 r/min
60Hz	2.5 r/min	1.9 r/min

* A customized rpm and torque available.

DIMENSIONS

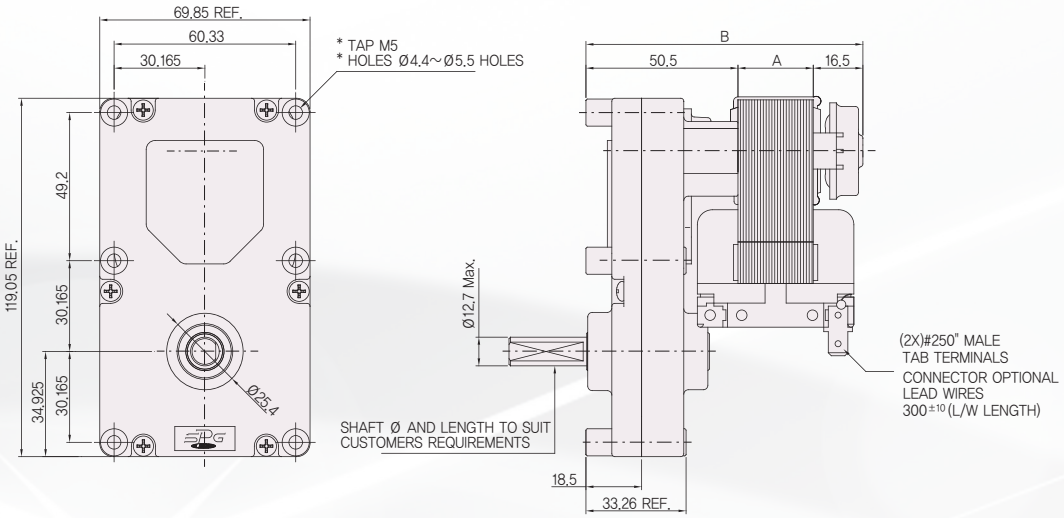

N-T CURVE CHARACTORISTICS

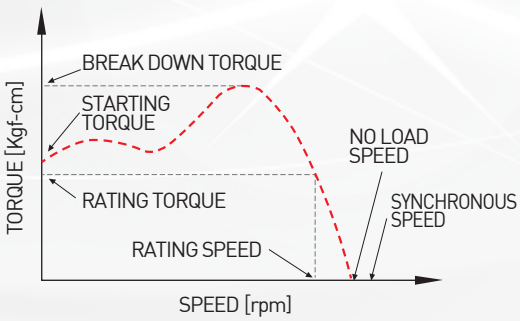

3 Core type Speed-Torque Charactoristics

Note)

1. Tb : Break Down Torque, Ts : Starting Torque, Tr : Rating Torque(About Max Effciency)
2. Geared Motor Output Torque = Motor Torque×Gear Ratio×Gears Step(90%)
   Ex) Motors(C- i) + Gear Ratio(1/192) = 0.01×192×0.9^3 = 1.399 N-m(Ts)
3. Motor Specification Data may be largely differed according with Duty Type and Cooling methods.
4. If fan installed, Motor output canbe increased approximately 20%.
5. Refer to Motor Specification Data above. (Contact with agency or R&D for development)
6. Geared Motor Torque can be used within maximum permissible torque of GearBox. (Refer to 'Maximum Permissible Torque of Gear Box' table)

SHADED POLE GEARED MOTOR

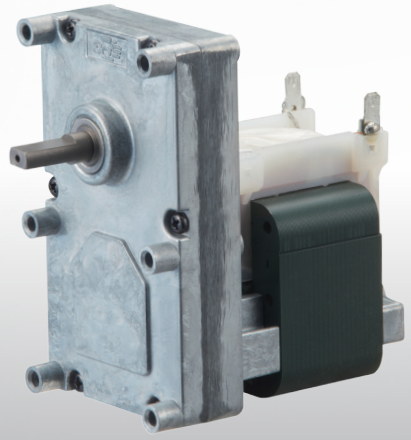

ISG-3 TYPE(40~50T)

- **Application** : Pellet Burner(or Stove) - Ashes Cleaner
- **Insulation Class** : B(130)
- **Mounting Position** : Any
- **Output Rotation** : C.W or C.C.W
- **Motor Protection** : Impedance or Thermally Protected
- **Cable exit** : Variable
- **Gear Box Permissible Torque** : 33.8 Nm
- **Duty** : S1(Continuous), S2(Short-time), S3(Intermittent periodic)
- **Output Shaft** : Length and diameter to suit individual customer requirements
- **etc.** : Low Noise, Fan Ass'y Type

SPECIFICATION

Type	A	B
ISG-3240Type	40mm	107mm
ISG-3250Type	50mm	117mm

Ratio	1/511(Gear Step : 4)	1/853(Gear Step : 4)
50Hz	5.7 r/min	3.4 r/min
60Hz	6.8 r/min	4.1 r/min

* A customized rpm and torque available.

DIMENSIONS

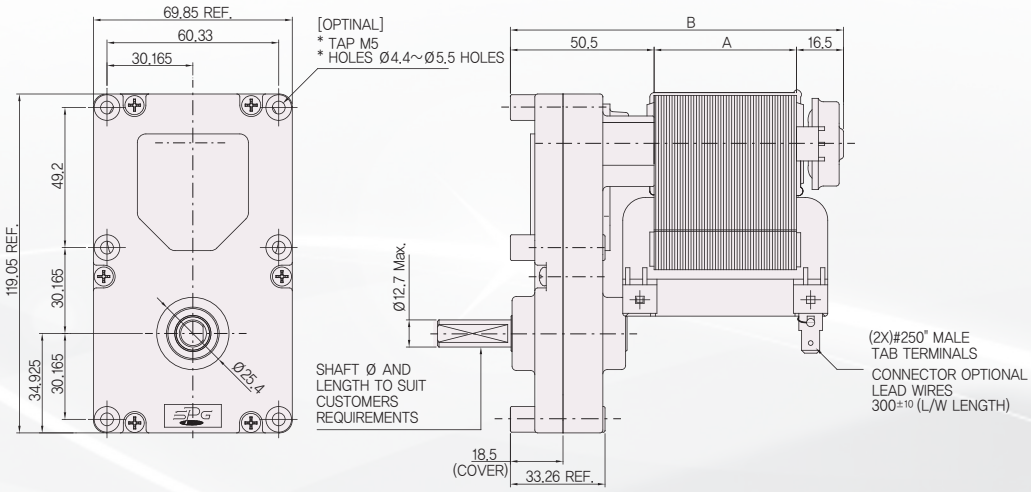

N-T CURVE CHARACTORISTICS

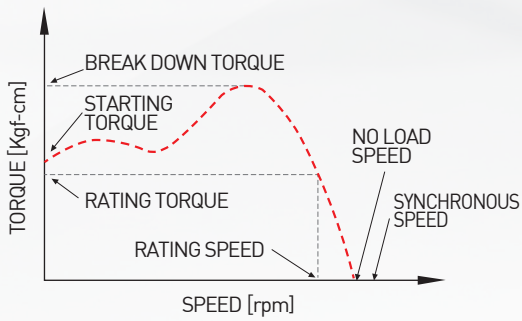

3 Core type Speed-Torque Charactoristics

Note)

1. Tb : Break Down Torque, Ts : Starting Torque, Tr : Rating Torque(About Max Effciency)
2. Geared Motor Output Torque = Motor Torque×Gear Ratio×Gears Step(90%)
   Ex) Motors(C- i) + Gear Ratio(1/192) = 0.01×192×0.9^3 = 1.399 N-m(Ts)
3. Motor Specification Data may be largely differed according with Duty Type and Cooling methods.
4. If fan installed, Motor output canbe increased approximately 20%.
5. Refer to Motor Specification Data above. (Contact with agency or R&D for development)
6. Geared Motor Torque can be used within maximum permissible torque of GearBox. (Refer to 'Maximum Permissible Torque of Gear Box' table)

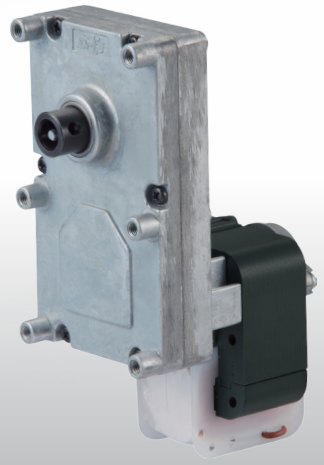

ISG-3 TYPE(HOLLOW SHAFT)

- **Application** : Pellet Burner(or Stove) - Ashes Cleaner
- **Insulation Class** : B(130)
- **Mounting Position** : Any
- **Output Rotation** : C.W or C.C.W
- **Motor Protection** : Impedance or Thermally Protected
- **Leads** : Variable
- **Gear Box Permissible Torque** : 33.8 Nm
- **Duty** : S1(Continuous), S2(Short-time), S3(Intermittent periodic)
- **Output Shaft** : Length and diameter to suit individual customer requirements
- **etc.** : Low Noise, Fan Ass'y Type

SPECIFICATION

Ratio	1/922.7(Gear Step : 4)	1/1855.7(Gear Step : 5)
50Hz	3.0 r/min	1.6 r/min
60Hz	3.7 r/min	1.8 r/min

* A customized rpm and torque available.

DIMENSIONS

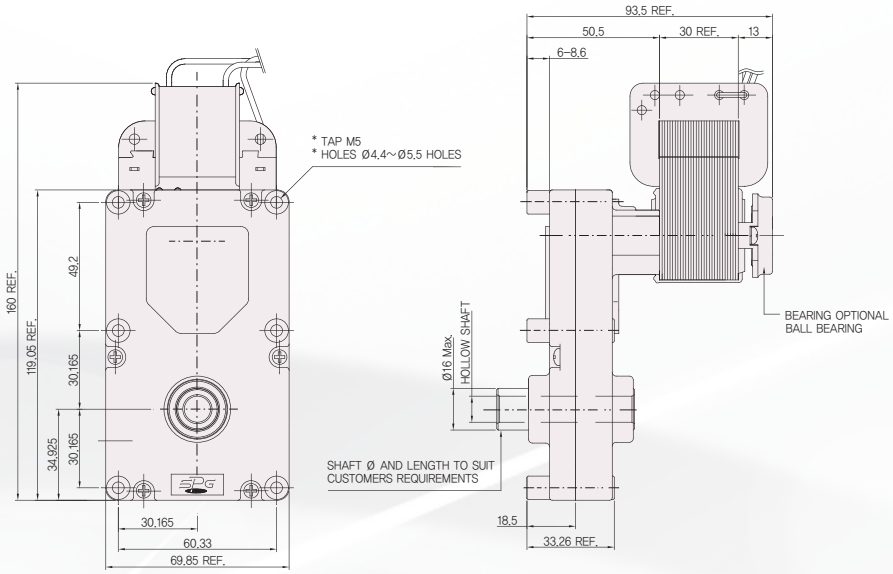

N-T CURVE CHARACTORISTICS

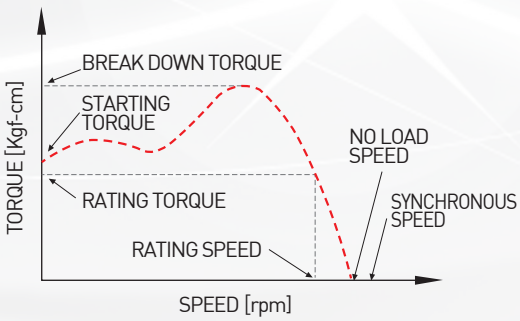

3 Core type Speed-Torque Charactoristics

Note)

1. Tb : Break Down Torque, Ts : Starting Torque, Tr : Rating Torque(About Max Effciency)
2. Geared Motor Output Torque = Motor Torque×Gear Ratio×Gears Step(90%)
   Ex) Motors(C- i) + Gear Ratio(1/192) = 0.01×192×0.9^3 = 1.399 N-m(Ts)
3. Motor Specification Data may be largely differed according with Duty Type and Cooling methods.
4. If fan installed, Motor output canbe increased approximately 20%.
5. Refer to Motor Specification Data above. (Contact with agency or R&D for development)
6. Geared Motor Torque can be used within maximum permissible torque of GearBox. (Refer to 'Maximum Permissible Torque of Gear Box' table)

BLDC GEARED MOTOR

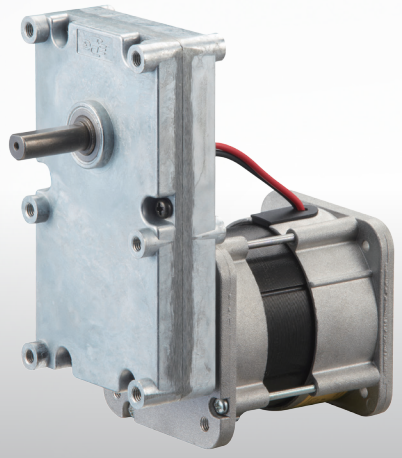

DC BRUSHLESS SERIES

- **Application** : Pellet Burner(or Stove)
- **Input Voltage** : DC 24V
- **Insulation Class** : B(130)
- **Mounting Position** : Any
- **Output Rotation** : C.W or C.C.W
- **Motor Protection** : Over Current Limit
- **Cable exit** : Variable
- **Gear Box Permissible Torque** : 33.8 Nm
- **Duty** : S1(Continuous)
- **Speed Range** : 0.9~30 r/min
- **etc.** : Low Noise, High Efficiency

SPECIFICATION

Core Height
15mm

Ratio	1/100(Gear Step : 3) to 1/3238(Gear Step : 5)
DC 24V	0.9 r/min to 30 r/min

TORQUE CHARACTERISTIC

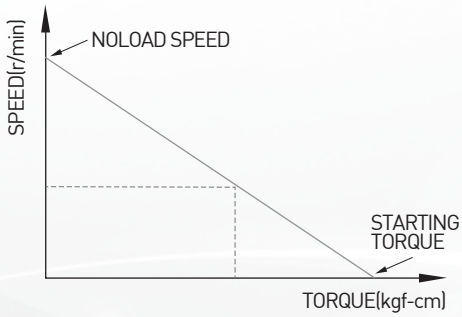

DIMENSIONS

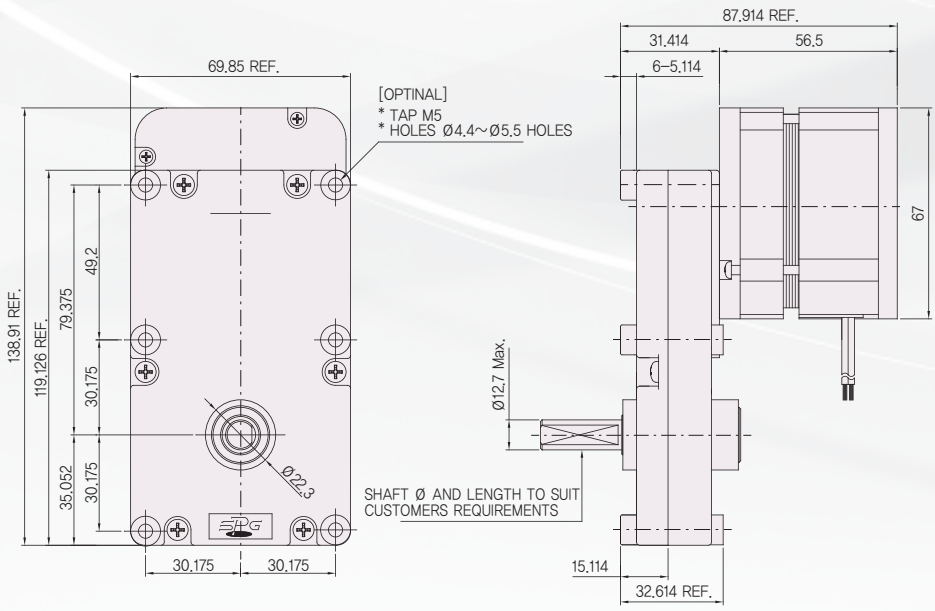

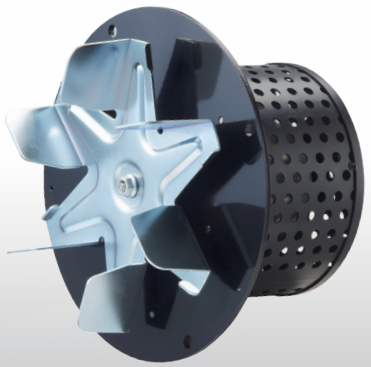

Single inlet, Ø 150_OSB-9215-A1520

- **Material** : Impeller made of corrosion-resistant stainless steel, steel sheets
- **Direction of rotation** : Counter-clockwise, clockwise seen on rotor
- **Type of protection** : IP 44
- **Insulation class** : "F"
- **Mounting position** : Any
- **Condensate discharges** : None
- **Mode of operation** : Continuous operation (S1)
- **Bearings** : Maintenance-free ball bearings

SPECIFICATION

TYPE	V	Hz	RPM	W	A	C
OSB-9215-A1520	230	50	2280	27	0.12	1.0/450

CURVES

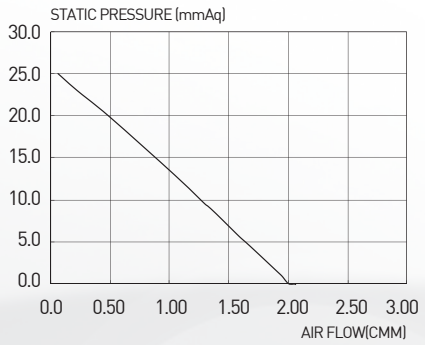

CONNECTION DIAGRAM

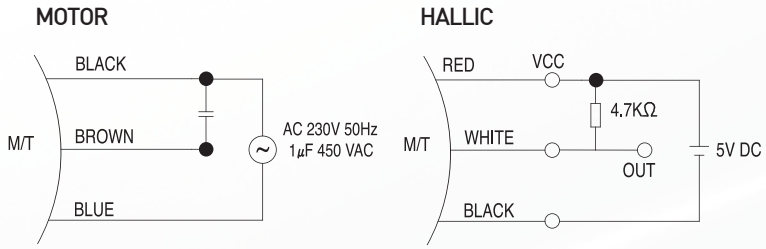

DIMENSIONS

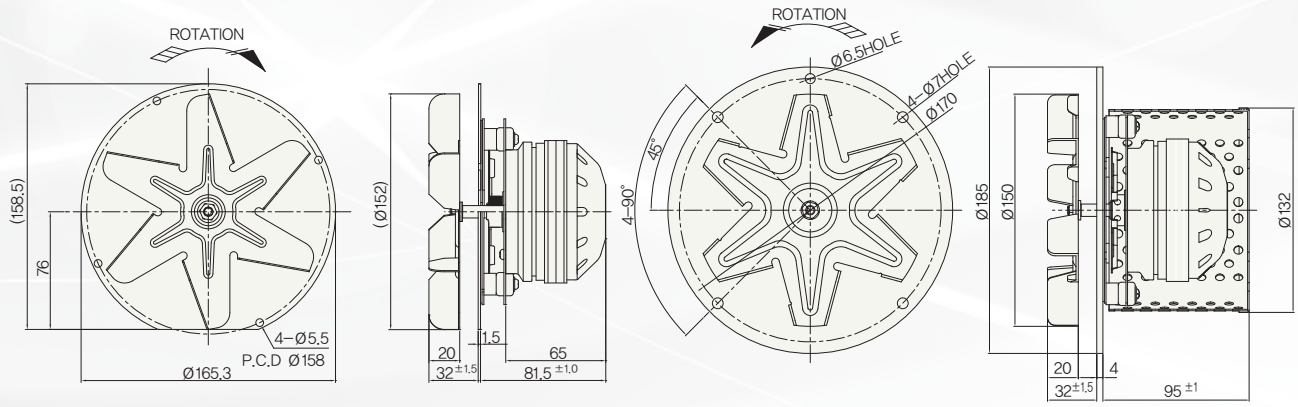

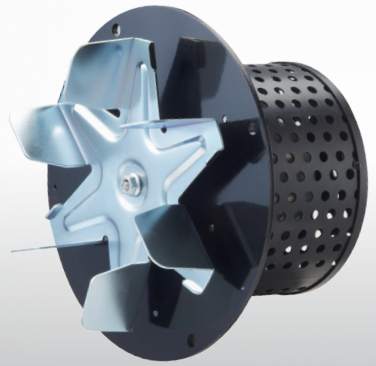

Single inlet, Ø 160_OSB-9225-A1640

- **Material** : Impeller made of steel sheets
- **Direction of rotation** : Counter-clockwise, clockwise seen on rotor
- **Type of protection** : IP 44
- **Insulation class** : "F"
- **Mounting position** : Any
- **Condensate discharges** : None
- **Mode of operation** : Continuous operation (S1)
- **Bearings** : Maintenance-free ball bearings

SPECIFICATION

TYPE	V	Hz	RPM	W	A	C
OSB-9225-A1640	230	50	2530	86	0.38	2.5/450

CURVES

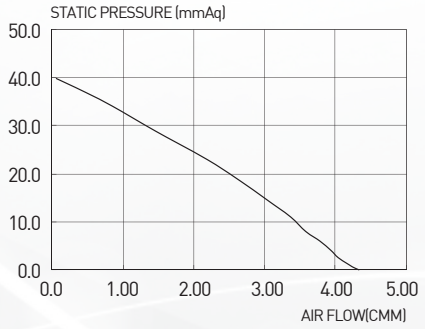

CONNECTION DIAGRAM

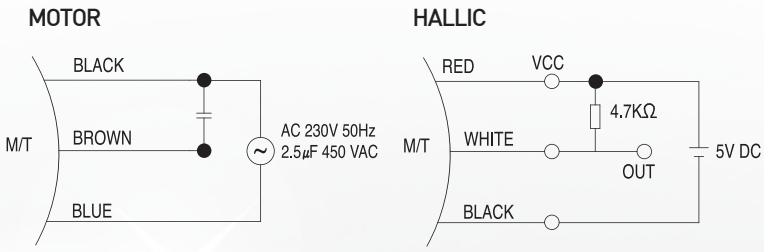

DIMENSIONS

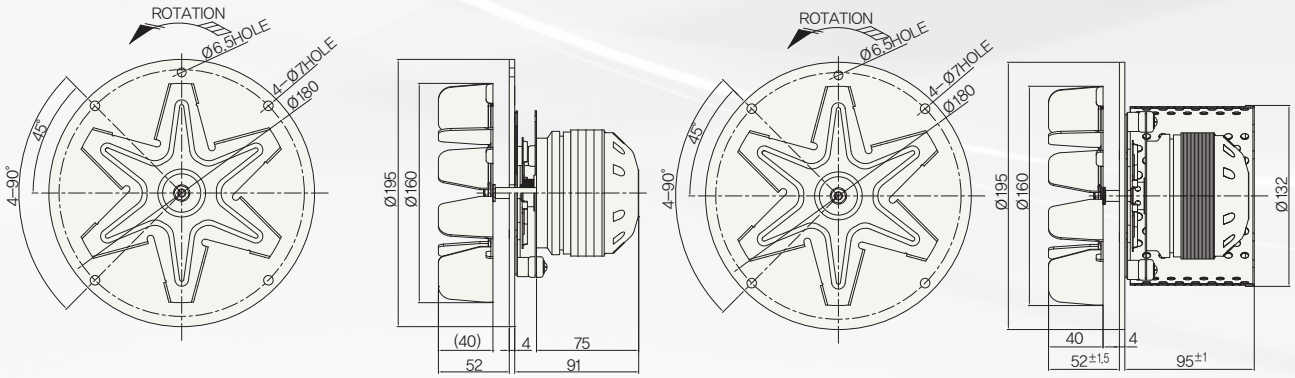

Single inlet, Ø 180_OSB-9215-A1826

- **Material** : Impeller made of steel sheets
- **Direction of rotation** : Counter-clockwise, clockwise seen on rotor
- **Type of protection** : IP 44
- **Insulation class** : "F"
- **Mounting position** : Any
- **Condensate discharges** : None
- **Mode of operation** : Continuous operation (S1)
- **Bearings** : Maintenance-free ball bearings

SPECIFICATION

TYPE	V	Hz	RPM	W	A	C
OSB-9215-A1826	230	50	1450	39	0.17	1/450

CURVES

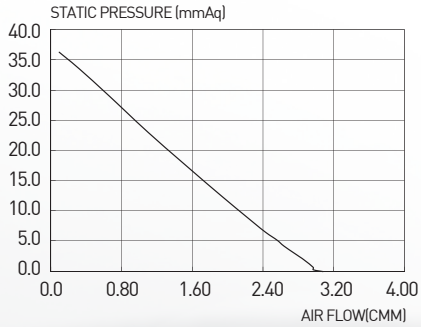

CONNECTION DIAGRAM

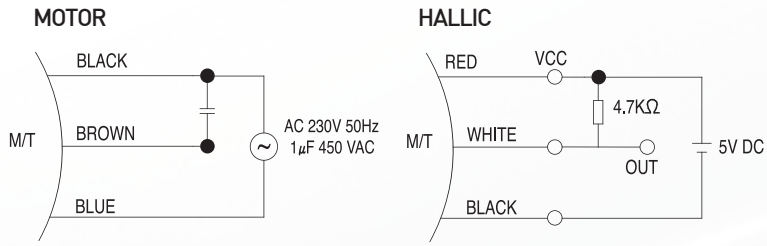

DIMENSIONS

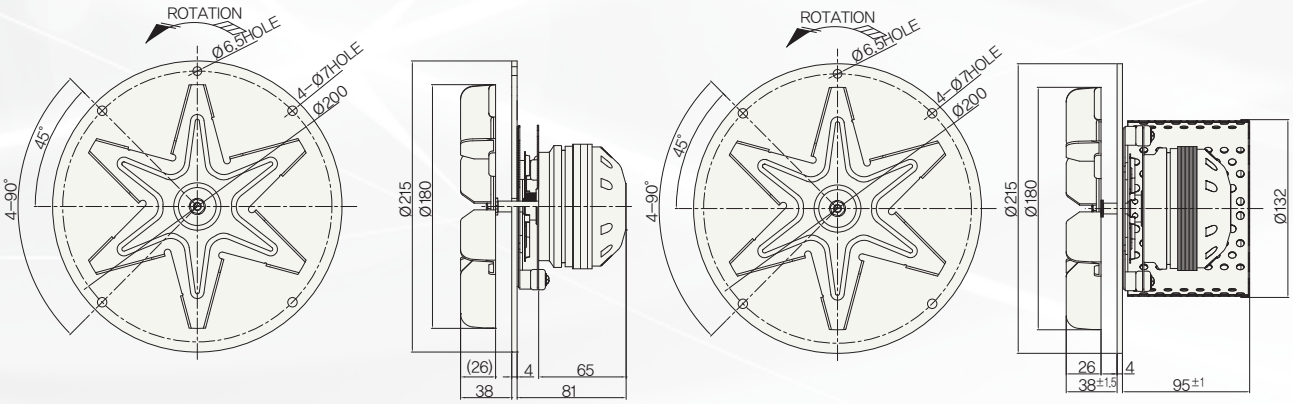

AC RADIAL FAN MOTOR

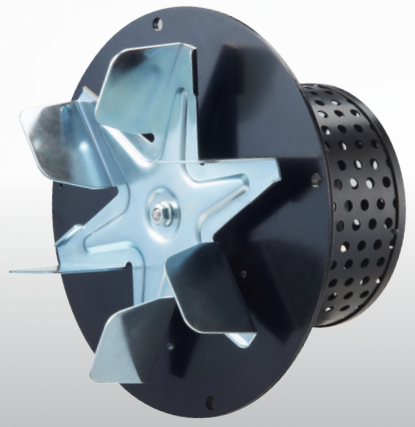

Single inlet, Ø 180_OSB-9225-A1845

- **Material** : Impeller made of steel sheets
- **Direction of rotation** : Counter-clockwise, clockwise seen on rotor
- **Type of protection** : IP 44
- **Insulation class** : "F"
- **Mounting position** : Any
- **Condensate discharges** : None
- **Mode of operation** : Continuous operation (S1)
- **Bearings** : Maintenance-free ball bearings

SPECIFICATION

TYPE	V	Hz	RPM	W	A	C
OSB-9225-A1845	230	50	2065	118	0.52	2/450

CURVES

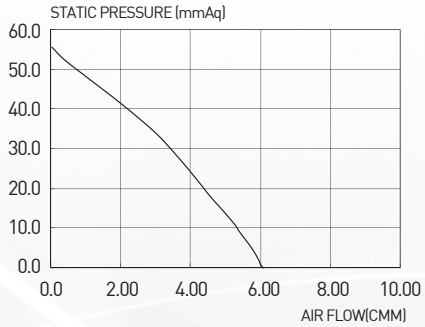

CONNECTION DIAGRAM

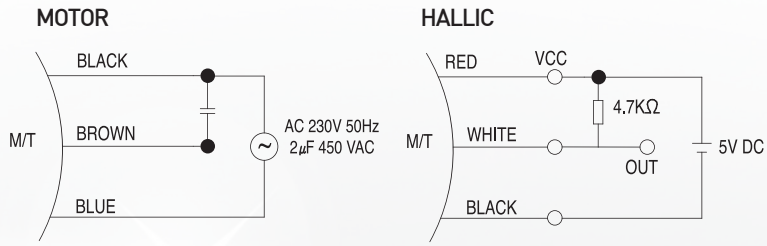

DIMENSIONS

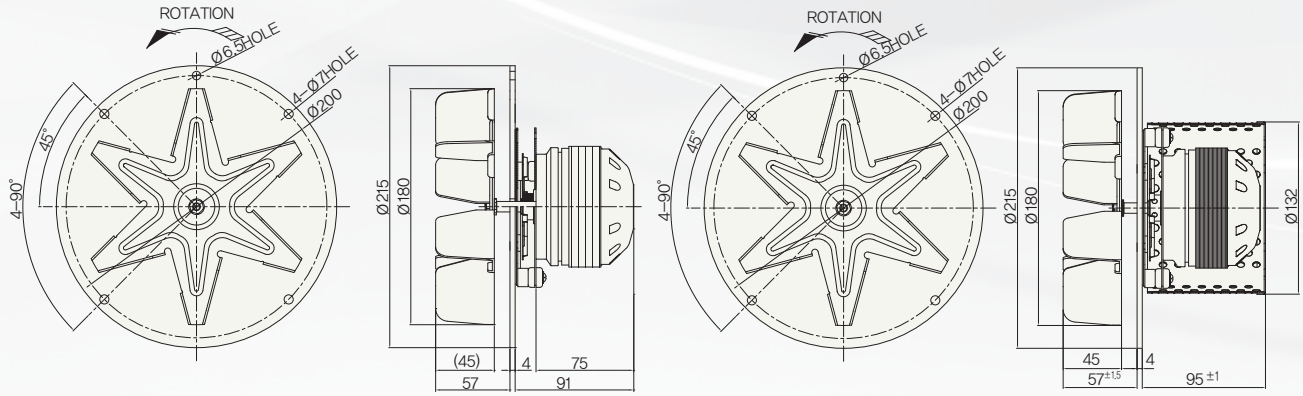

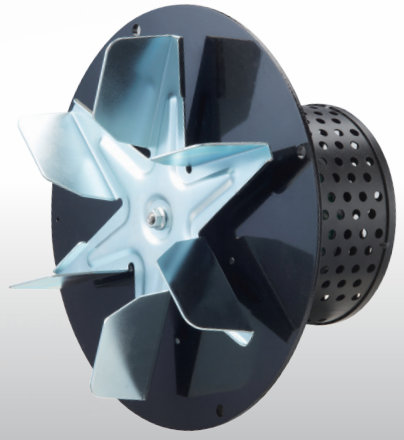

Single inlet, Ø 210_OSB-9235-A2145

- **Material** : Impeller made of steel sheets
- **Direction of rotation** : Counter-clockwise, clockwise seen on rotor
- **Type of protection** : IP 44
- **Insulation class** : "F"
- **Mounting position** : Any
- **Condensate discharges** : None
- **Mode of operation** : Continuous operation (S1)
- **Bearings** : Maintenance-free ball bearings

SPECIFICATION

TYPE	V	Hz	RPM	W	A	C
OSB-9235-A2145	230	50	1730	210	0.95	2.5/450

CURVES

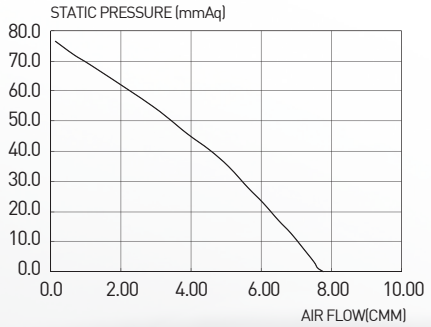

CONNECTION DIAGRAM

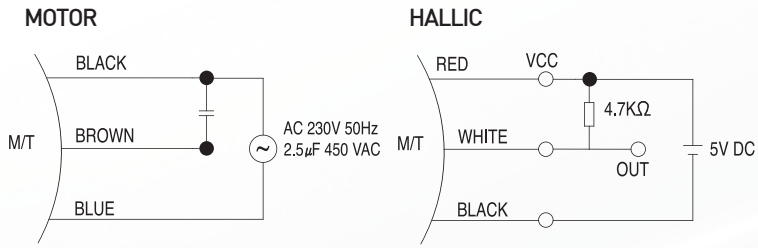

DIMENSIONS

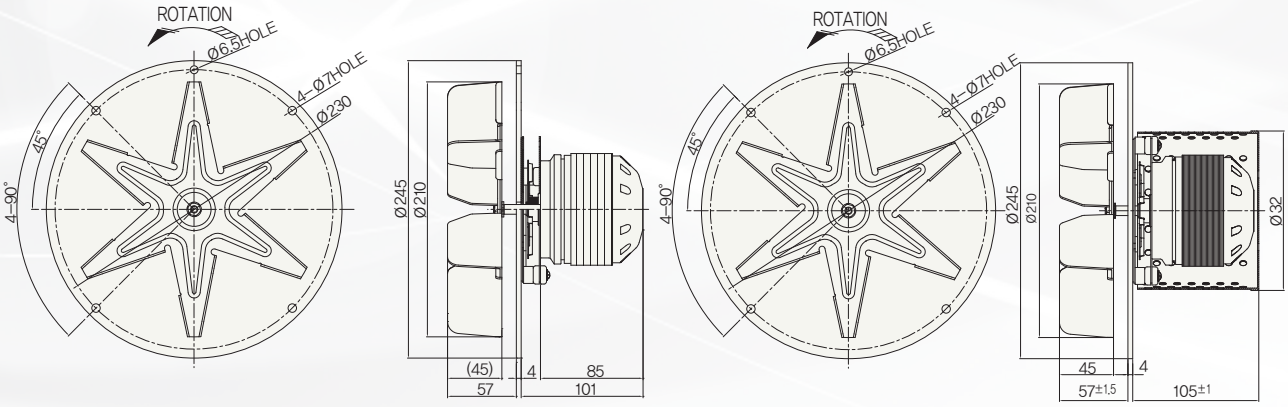

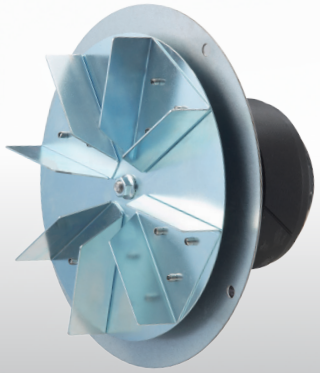

Single inlet, Ø 160_OSB-9225-A1626

- **Material** : Impeller made of steel sheets
- **Direction of rotation** : Counter-clockwise, clockwise seen on rotor
- **Type of protection** : IP 44
- **Insulation class** : "F"
- **Mounting position** : Any
- **Condensate discharges** : None
- **Mode of operation** : Continuous operation (S1)
- **Bearings** : Maintenance-free ball bearings

SPECIFICATION

TYPE	V	Hz	RPM	W	A	C
OSB-9225-A1626	230	50	2480	97	0.44	2.0/450

CURVES

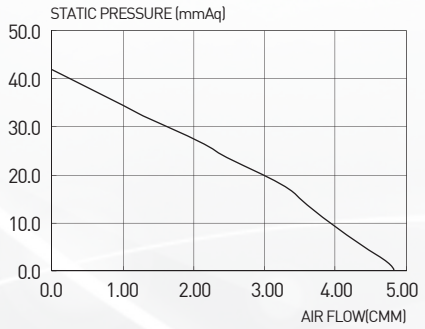

CONNECTION DIAGRAM

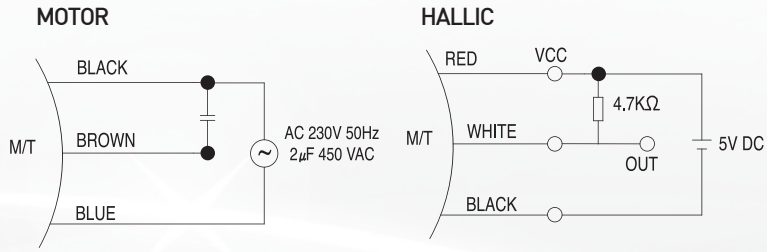

DIMENSIONS

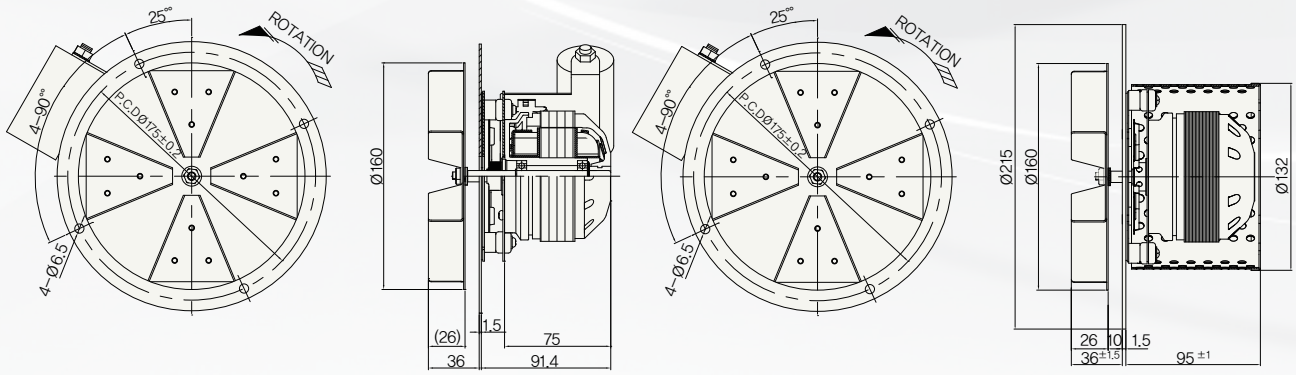

Scroll dimensions

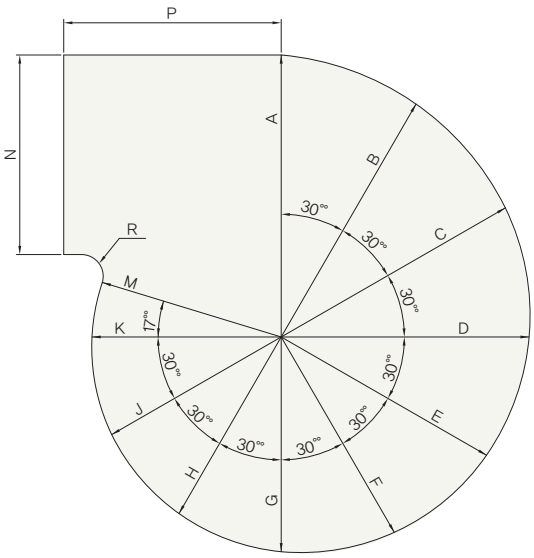

Scroll dimensions for AC/EC centrifugal fans

SIZE	A	B	C	D	E	F	G	H	J	K	M	N	P	R
150/152	130	124	119	114	109	104	99	94	90	87	86	92	100	10
160	139	132	127	122	116	111	106	100	96	93	92	98	107	11
180	156	149	143	137	131	125	119	113	108	104	103	110	120	12
210	182	174	167	160	152	146	139	132	127	121	120	128	140	14

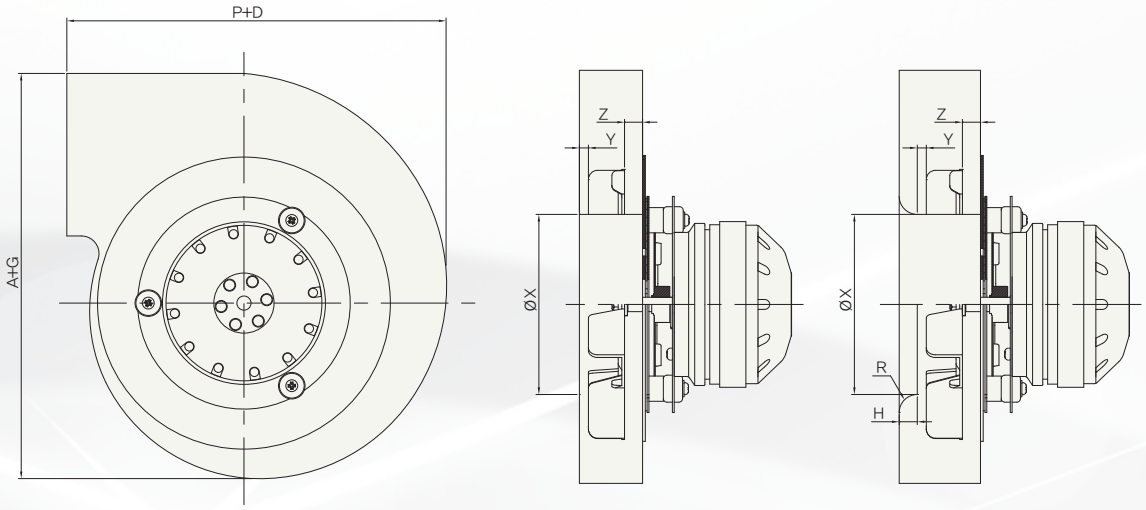

Distance between impeller and scroll housing/inlet nozzle

SIZE	X	Y	Z	R	H
150/152	90-110	5	10	10	10
160	100-120	5	10	10	10
180	110-130	5	10	12	12
210	120-135	5	10	12	12

MEMO

MEMO

SPG Co., Ltd

■ **SPG USA, INC**
501 Lively Blvd. Elk Grove Village, IL 60007, USA
TEL. 1-847-439-4949 FAX. 1-847-439-4940
www.spg-usa.com

■ **SPG Europe B.V.**
Tupolevlaan 46, 1119NZ, Schiphol-Rijk,The Netherlands
TEL. +31 20 655 37 73 FAX. +31 20 653 80 40
www.spg-eu.com